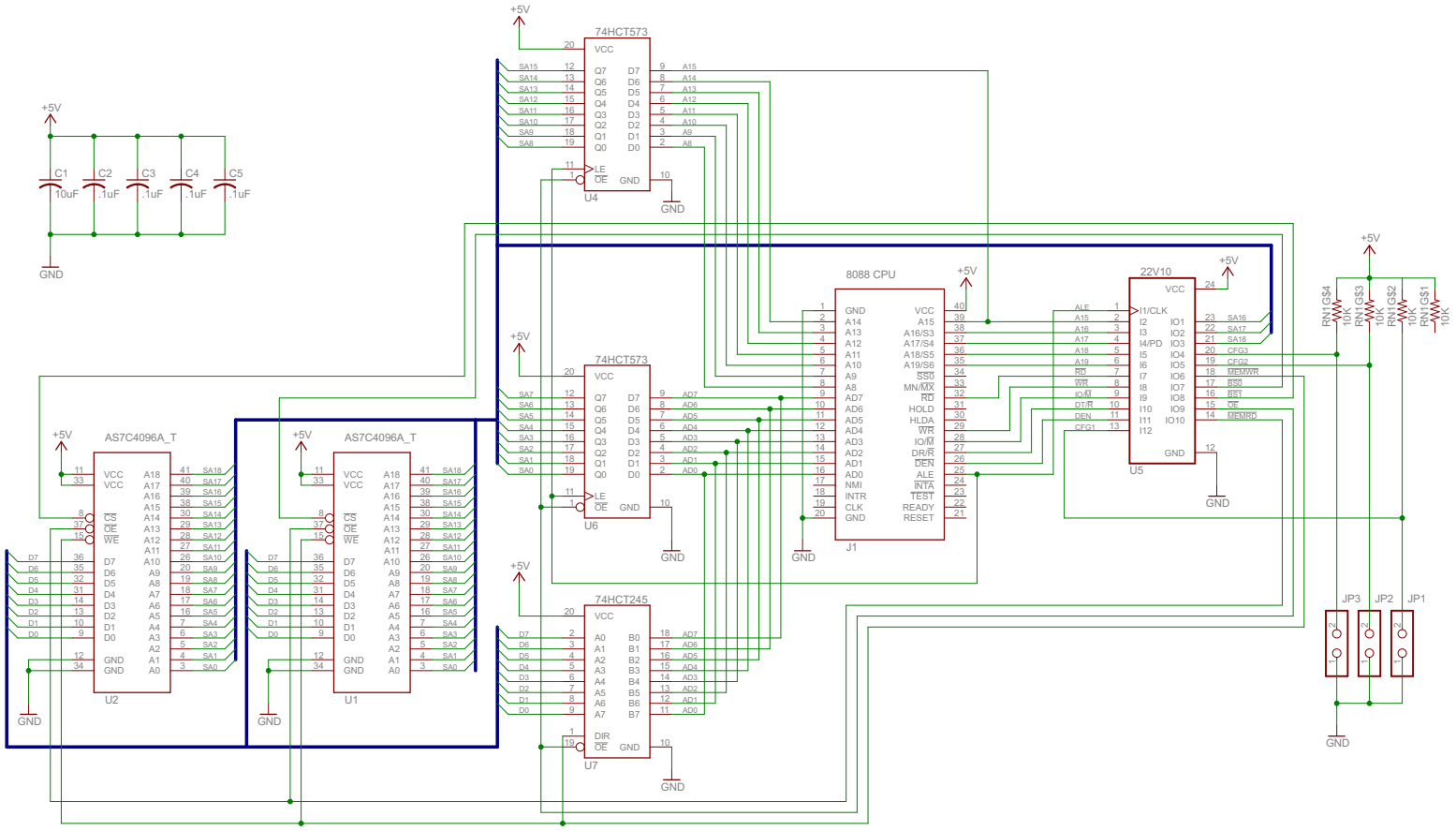

TITLE: inline_ram

Document Number:

REV:

Date: 5/29/2011 4:15:26 PM

Sheet: 1/1